SILANE - Vanity 2 drawers - 600 /800/1000/1200 (2x600)



E-05
STANDARD EN 717-1

DAMPED CLOSING

WOODEN DRAWER

Hettich
RUNNERS HETTICH

Exterior finishes

White Satin RAL 9016

Green Satin Pantone 4222C RAL 120 50 10

Grey Satin NCS S 3502-Y RAL 7038

African Oak

Walnut Maya

Interior finishes

Onix

Technical characteristics

_Front/side Panels (e=16 mm):
- Laminated particle board. PVC edging "Testa" design with PUR glue.

_Internal Structure Panels (e=16mm):
- Laminated particle board onix finish.

*All panels used in the manufacture of this unit are classed as E-1 grade with low level of formaldehyde content.

*Trim varies according to design: PVC, ABS (edged with PUR glue)

Vanity dimensions and package weight

	600	800	1000
Länge mm.	660	860	1060
Tiefe mm.		510	
Höhe mm.		610	
Nettogewicht kg.	23,2	27,1	31,6
Bruttogewicht kg.	25,3	30,2	34,7

Vanity dimensions

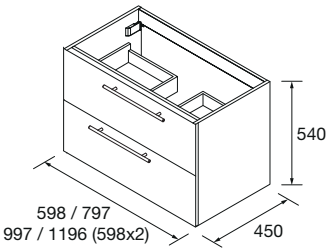

Metal fitting

_Drawers: Wooden drawer with concealed partial extraction runner with soft closing and height adjustment. Maximum load capacity. 25 Kg

_Cabinet hangers: Heavy duty hanger with three independent adjustments accessible from the front. Load capacity 70Kg.

Free space for water pipe

Recommended height for inset sink
(*) Height for countertop sink

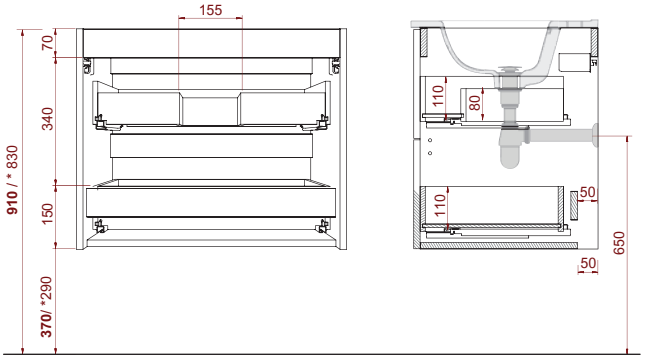

Compatible Washbasins

- 600/800/1000: Ibon
- 1200: Ibon double sink
- 1200: Ibon shifted left and right

SILANE - Column 300x1400





E-05
STANDARD EN 717-1

DAMPED CLOSING

REVERSIBLE

Exterior finishes


White Satin RAL 9016


Green Satin Pantone 4222C RAL 120 50 10


Grey Satin NCS S 3502-Y RAL 7038


African Oak


Walnut Maya

Interior


Onix

Technical characteristics

_Side panels (Thickness=16mm)::
- African Oak, Walnut Maya, White Satin, Green Satin: Laminated particle board.

_Internal structure panels (Thickness=16mm): Laminated particle board onix.

* All the panels used in the manufacture of this unit are classed as E-05 grade with low level of formaldehyde content.
*Trim varies according to design: PVC, ABS (edged with PUR glue)

Metal fitting

_Door and Hinges: 1 soft-close door

_Hangers: Heavy duty hanger with three independent adjustments accessible from the front. Load capacity 70Kg.

_Inner Trays: 4 units height adjustable wooden tray (12mm thick)

Vanity dimensions and package weight

	300 x 1400
Length mm.	330
Depth mm.	270
Height mm.	1430
Net weight Kg.	18,3
Gross weight Kg.	19,9

Vanity dimensions

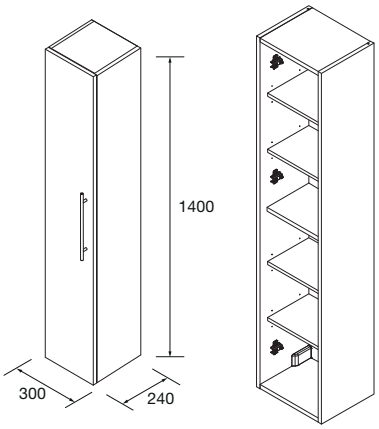

Handle QUILT



MATT BLACK

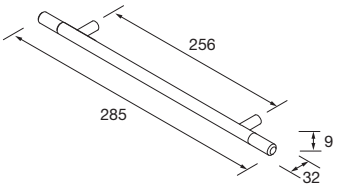



MATT ANODIZED