VIMA - Vanity 2 drawers - 600 / 800 / 1000 / 1200 (2x600)



E-05

STANDARD EN 717-1 | DAMPED CLOSING | WOODEN DRAWER | RUNNERS HETTICH

Exterior finishes

White Satin RAL 9016

Walnut Maya

Grey Satin NCS S 3502-Y RAL 7038

Aqua NCS S 4010-B50G RAL 150 60 20

Interior finishes

Onix

Technical information

_Front Panels (e=16 mm):
- Laminated particle board. PVC edging "Testa" design with PUR glue.

_Side Panels (e=16mm):
- MDF board PVC coated with 2D foil with angled side molding.

_Internal Structure Panels (e=16mm):
- Laminated particle board onix finish.

*All panels used in the manufacture of this unit are classed as E-1 grade with low level of formaldehyde content.

*Trim varies according to design: PVC, ABS (edged with PUR glue)

Packaging dimensions and weight

	600	800	1000
Lenght (mm)	660	860	1060
Depth (mm)	510		
Height (mm)	700		
Net weight (kg)	22,4	26,7	31
Gross weight (kg)	25	29,7	34,5

Fittings

_Cabinet hangers: Heavy duty hanger with three independent adjustments accessible from the front. Load capacity 70Kg.

_Drawers: Wooden drawer with Hettich concealed partial extraction runner with soft closing and height adjustment. Maximum load capacity 25 Kg.

Dimensions

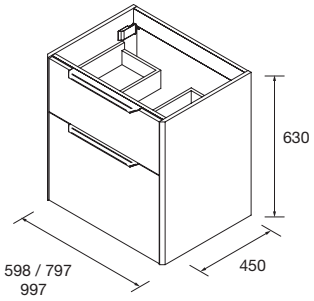

Compatible Washbasins

- 600/800/1000: Ibon
- 1200: Ibon double sink
- 1200: Ibon shifted left and right

Back free space for water conections

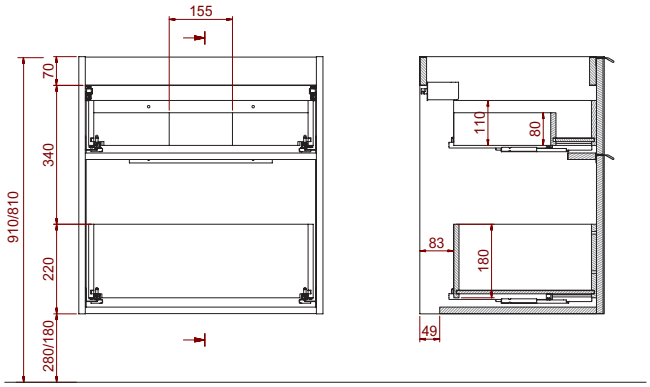

Handle VANN

Aluminum flap type handle.



MATT BLACK



GLOSS ANODIZED



BRUSH GOLD



BRUSH BRONZE

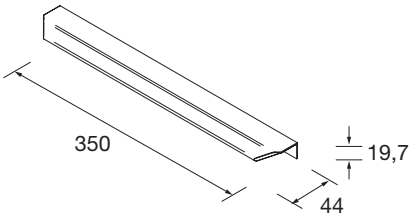

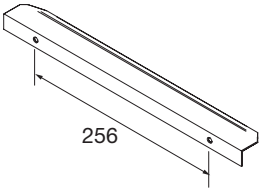

BESPOKE - Counter tops with a thickness of 16 mm



Exterior finishes

White Satin
RAL 9016

Walnut
Maya

Grey Satin
NCS S 5502-Y
RAL 7038

Aqua
NCS S 4010-B50G
RAL 150 60 20

Technical Characteristics

_Front & side panels (Thickness=16mm):
- Gloss White: Laminated particle board lacquered with UV high gloss polyester paint.
- Natural, African oak, Walnut Oak, Gloss White, White Satin, Black Satin, Blue Satin, Green Satin, Red Satin: Laminated particle board.

_Internal structure panels (Thickness=16mm): Laminated particle board.

* All the panels used in the manufacture of this unit are classed as E-05 grade with low level of formaldehyde content.
*Trim varies according to design: PVC, ABS (edged with PUR glue)

Dimensions

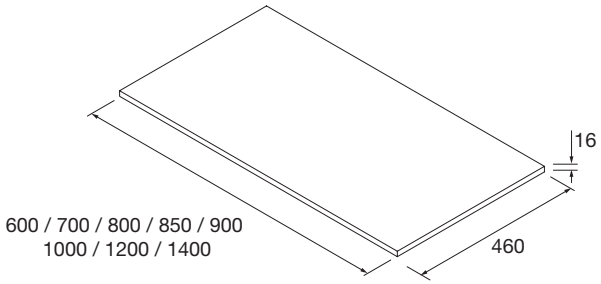

Top basins for combination

_Top basins:
Altiro, Seduction, Kandy, Lokum, Lisboa, Carla, Varmega.

Packaging dimensions and weight

	600	700	800	850	900	1000	1200	1400
Lenght (mm)	655	755	825	875	955	1025	1255	1455
Depth (mm)	495	495	481	481	495	481	515	515
Height (mm)	40	40	60	60	40	60	95	95
Net weight (kg)	3	3,5	4	4,3	4,5	5,2	6,2	7,2
Gross weight (kg)	3,5	4	4,8	5	5,1	5,9	7,2	8,4