DATA SHEET (Shower screen) 20190415

ODENSE - Fixed side

CHARACTERISTICS

- Tempered transparent glass Standard EN- 12150 6 mm door and fixed.
- 20 mm expansion per profile.
- Aluminum profile in gloss silver finish with chrome handles.
- Height: 2000 mm.
- Anti-scaling treatment included.



CERTIFICATES

CE - Product manufactured in accordance with the guidelines of European Community regulations.

EN14428 - Screen shower. Functional requirements and test methods.

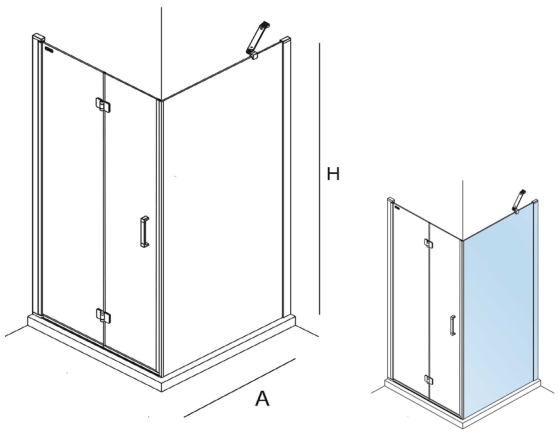

Finish

Ultra-Protect

OPTIONAL MAGNETIC LOCK

DO NOT USE ABRASIVE PRODUCTS



Transparent

Dimensions

Dimensions and pachaging weight

Medidas (A)	Width mm.	Depth mm.	Hight mm.
662 - 682	740	130	2085
762 - 782	840	130	2085
862 - 882	940	130	2085

Hight (H): 2000 mm.

Additional availability of supplementary adjustment profiles

Shapes	**Hight 2000 mm**
	PROFILE 20x20 DIAMOND
	PROFILE 40x20 DIAMOND
	PROFILE 40x40 DIAMOND
	PROFILE 40x60 DIAMOND
	PROFILE 40x80 DIAMOND